BCR431U_Schematic.SchDoc

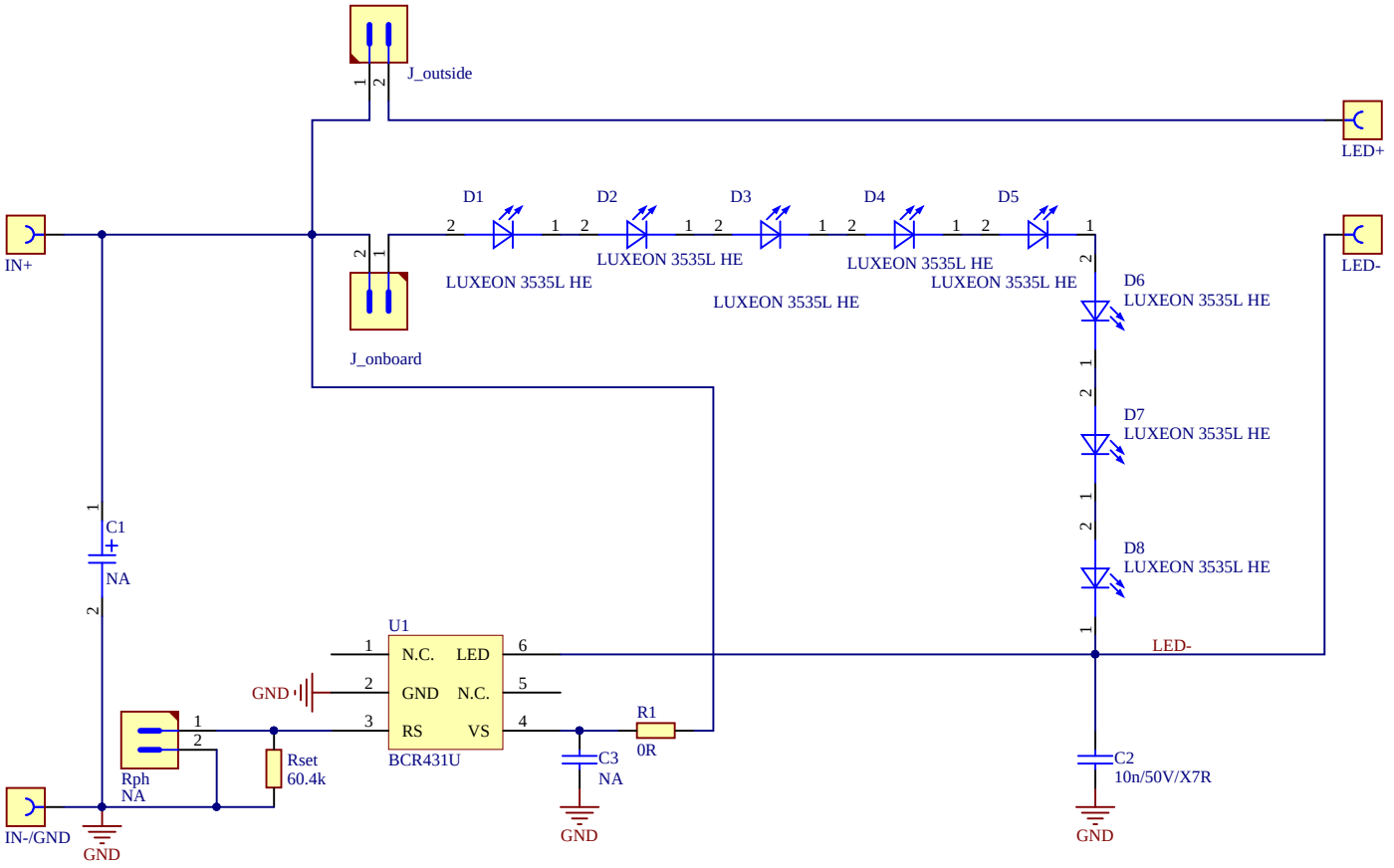

NA: not assembled

<DOC_Preliminary>
<DOC_ConfidentialStatus>

Infineon Technologies AG
PMM ACDC RDA AE
Am Campeon 1-15 - 85579 Neubiberg - Germany

Title	BCR431U		
Variant	Default_Assembly	Approved	<Appr.>
Size: A4	Document Name: BCR431U_Schematic.SchDoc	Rel.: <Rel.>	Rev.: V1.0

Author: ED
Date: 17.01.2020 Time: 12:14:36 SVN Revision: Not in version control

© Infineon Technologies AG 2014. All Rights Reserved.

Sheet of